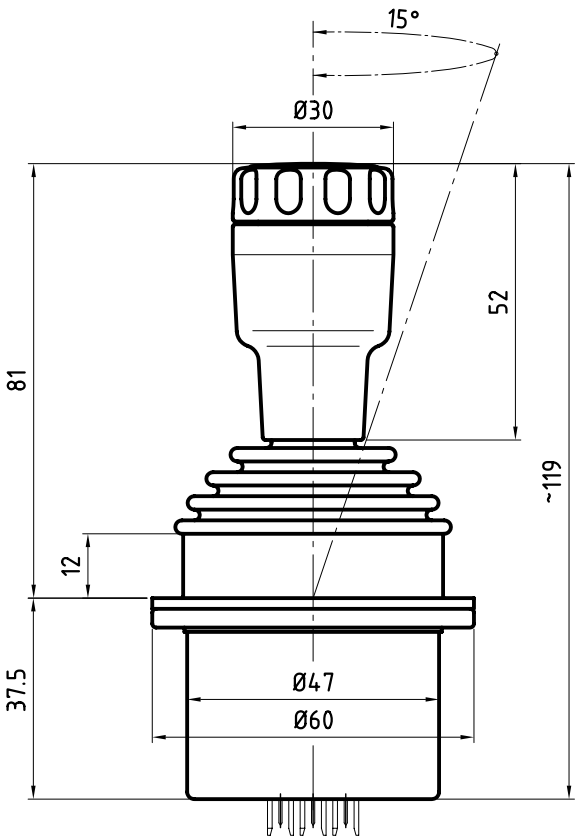

Gate
(Top view)

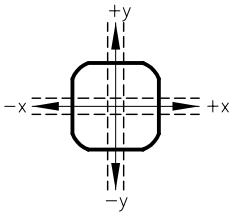

Rotation angle
(Z-axis)

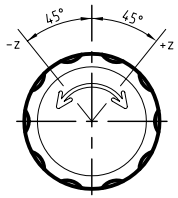

Output diagram
x−, y−axis

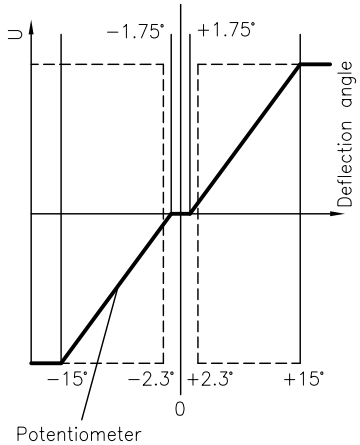

Output diagram
z−axis

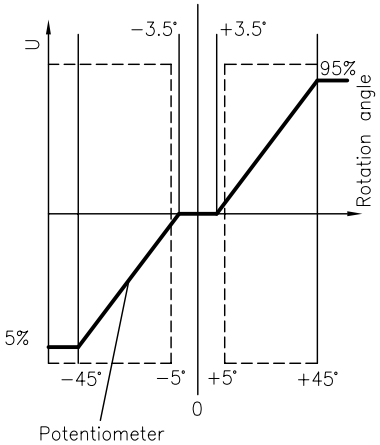

Bottom view

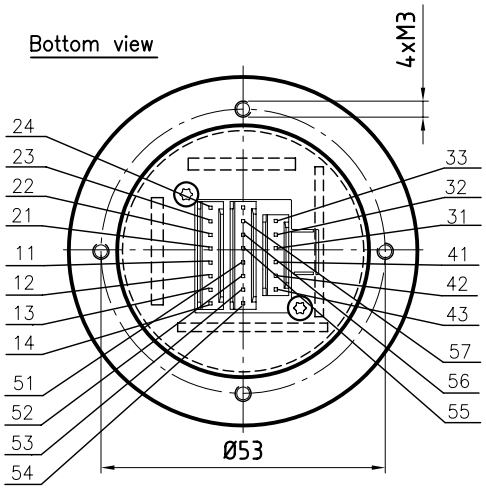

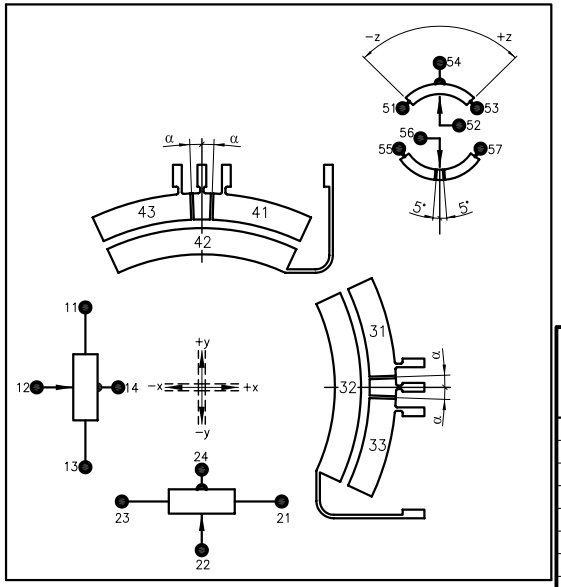

Description

Joystick Type SK 60−0922	
Number of axes	3−axes, x−axis, y−axis, z−axis
Operation by	Handle with integrated z−axis
Connector: DUBOX Walled Header	2x8−poles: 76384−308 6−poles: 76384−306
Mating connector Dubox Housing Anti−rotation locking	2x8−poles: 65240−008 6−poles: 65240−006
Center tab	x− and y−axis ±1.75° / z−axis ±3.5°
Retaining spring	normal Z−Nr. 60−112
Switch funktion	2 shift segments per axis

Electrical characteristics

Resistance value	5 kOhm ± 20%
Power dissipation	0.2 Watt at 40°C per axis
Operating voltage	max. 30V DC
Contact rating	Zero potentional difference between segments 5 V DC, 5 mA

Axes		Potentiometer		Connector side	
	Direction	Colour/ number	Center tab	Joystick in mid−position	
x−axis	↑ +x	21	24	41	open
	Wiper	22		42	
	↓ −x	23		43	open
y−axis	↑ +y	11	14	31	open
	Wiper	12		32	
	↓ −y	13		33	open
z−axis	↑ +z	53	54	55	open
	Wiper	52		56	
	↓ −z	51		57	open

					Oberfläche	Maßstab 1:1	Position Menge
					Datum	Name	
				Bearb.	07.12.12	M. Kiener	Joystick
				Gepr.			
				Norm			
				GENGE &THOMA AG CH−2543 Lengnau/Biel			60-0922
Zust.	Änderungen	Datum	Name	Dateiname E:\Dwg\Dwg SK60\...\60-0922.dwg			Blatt Bl