18 Flush design

Indicator, IP 40

Product can differ from the current configuration.

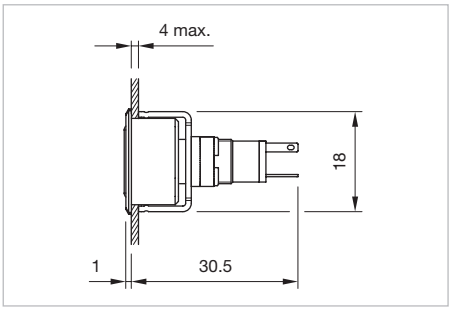

Dimensions [mm]

Additional Information

- For front dimensions 19 x 19 mm or Ø 19mm
- Luminosity and wave length variations caused by LED manufacturing processes may cause slight differences regarding the illumination
- The series resistance for LEDs need to be determined and integrated by customers.

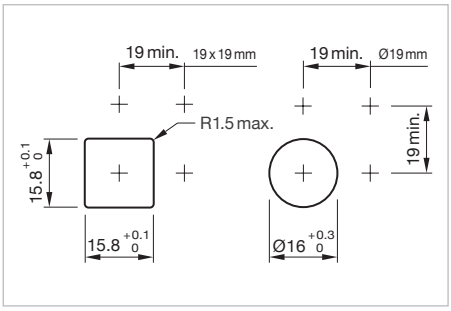

Mounting cut-outs [mm]

Equipment consisting of (schematic overview)

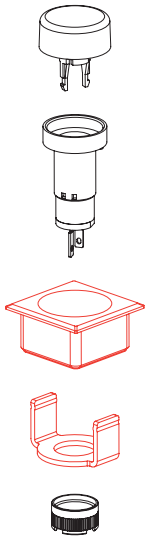

Lens

Actuator

Front bezel set *page 16*

Fixing nut

Each Part Number listed below includes all the black components shown in the 3D-drawing.

To obtain a complete unit, please select the red components from the pages shown.

LED colour	Forward voltage typ.	Operating voltage	Operation current	Lens	Terminal	Part No.	Component layout	Wiring diagram	Weight
Indicator actuator									
red	2.0 VDC @ 20 mA	customer-specific	10 mA	Plastic red translucent	Solder	**18-080.0052L**	1	1	0.002 kg
white	3.0 VDC @ 20 mA	customer-specific	10 mA	Plastic yellow translucent	Solder	**18-080.0054L**	1	1	0.002 kg
green	3.2 VDC @ 20 mA	customer-specific	2 mA	Plastic green translucent	Solder	**18-080.0055L**	1	1	0.002 kg
		12 VDC ±10 %	10 mA	Plastic red translucent	Solder	**18-081.0052L**	1	1	0.002 kg
			10 mA	Plastic yellow translucent	Solder	**18-081.0054L**	1	1	0.002 kg
			2 mA	Plastic green translucent	Solder	**18-081.0055L**	1	1	0.002 kg
		24 VDC ±10 %	10 mA	Plastic red translucent	Solder	**18-082.0052L**	1	1	0.002 kg
			10 mA	Plastic yellow translucent	Solder	**18-082.0054L**	1	1	0.002 kg
			2 mA	Plastic green translucent	Solder	**18-082.0055L**	1	1	0.002 kg

LED colour	Forward voltage typ.	Operating voltage	Operation current	Lens	Terminal	Part No.	Compo-nent layout	Wiring diagram	Weight
Indicator actuator									
red	2.0 VDC @ 20 mA	customer-specific	10 mA	Plastic red translucent	Solder	**18-060.0052L**	1	1	0.002 kg
white	3.0 VDC @ 20 mA	customer-specific	10 mA	Plastic yellow translucent	Solder	**18-060.0054L**	1	1	0.002 kg
green	3.2 VDC @ 20 mA	customer-specific	2 mA	Plastic green translucent	Solder	**18-060.0055L**	1	1	0.002 kg
		12 VDC ±10 %	10 mA	Plastic red translucent	Solder	**18-061.0052L**	1	1	0.002 kg
			10 mA	Plastic yellow translucent	Solder	**18-061.0054L**	1	1	0.002 kg
			2 mA	Plastic green translucent	Solder	**18-061.0055L**	1	1	0.002 kg
		24 VDC ±10 %	10 mA	Plastic red translucent	Solder	**18-062.0052L**	1	1	0.002 kg
			10 mA	Plastic yellow translucent	Solder	**18-062.0054L**	1	1	0.002 kg
			2 mA	Plastic green translucent	Solder	**18-062.0055L**	1	1	0.002 kg

The component layouts you will find from page 20

Wiring diagram 1

18 Raised design

Indicator, IP 40

Product can differ from the current configuration.

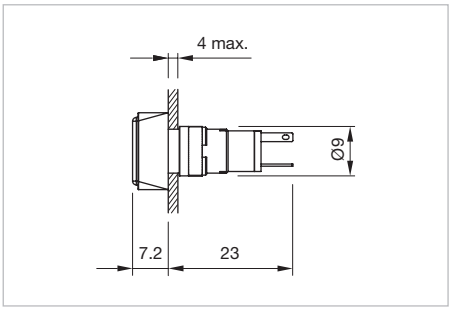

Dimensions [mm]

Equipment consisting of (schematic overview)

Lens

Actuator

Fixing nut

Each Part Number listed below includes all the black components shown in the 3D-drawing.

Additional Information

- Luminosity and wave length variations caused by LED manufacturing processes may cause slight differences regarding the illumination
- The series resistance for LEDs need to be determined and integrated by customers.

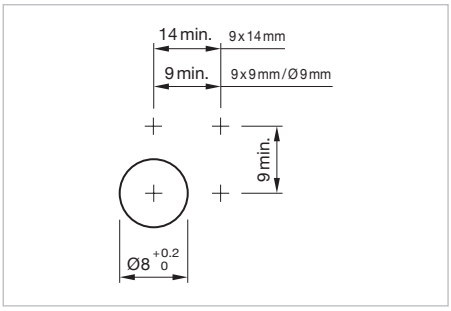

Mounting cut-outs [mm]

LED colour	Forward voltage typ.	Operating voltage	Operation current	Lens	Terminal	Part No.	Component layout	Wiring diagram	Weight
Indicator actuator, Front dimension 9 x 9 mm									
red	2.0 VDC @ 20 mA	customer-specific	10 mA	Plastic red translucent	Solder	**18-050.0052L**	1	1	0.002 kg
white	3.0 VDC @ 20 mA	customer-specific	10 mA	Plastic yellow translucent	Solder	**18-050.0054L**	1	1	0.002 kg
green	3.2 VDC @ 20 mA	customer-specific	2 mA	Plastic green translucent	Solder	**18-050.0055L**	1	1	0.002 kg
		12 VDC ±10 %	10 mA	Plastic red translucent	Solder	**18-051.0052L**	1	1	0.002 kg
			10 mA	Plastic yellow translucent	Solder	**18-051.0054L**	1	1	0.002 kg
			2 mA	Plastic green translucent	Solder	**18-051.0055L**	1	1	0.002 kg
		24 VDC ±10 %	10 mA	Plastic red translucent	Solder	**18-052.0052L**	1	1	0.002 kg
			10 mA	Plastic yellow translucent	Solder	**18-052.0054L**	1	1	0.002 kg
			2 mA	Plastic green translucent	Solder	**18-052.0055L**	1	1	0.002 kg
Indicator actuator, Front dimension 9 x 14 mm									
red	2.0 VDC @ 20 mA	customer-specific	10 mA	Plastic red translucent	Solder	**18-040.0052L**	1	1	0.002 kg
white	3.0 VDC @ 20 mA	customer-specific	10 mA	Plastic yellow translucent	Solder	**18-040.0054L**	1	1	0.002 kg
green	3.2 VDC @ 20 mA	customer-specific	2 mA	Plastic green translucent	Solder	**18-040.0055L**	1	1	0.002 kg
		12 VDC ±10 %	10 mA	Plastic red translucent	Solder	**18-041.0052L**	1	1	0.002 kg
			10 mA	Plastic yellow translucent	Solder	**18-041.0054L**	1	1	0.002 kg
			2 mA	Plastic green translucent	Solder	**18-041.0055L**	1	1	0.002 kg
		24 VDC ±10 %	10 mA	Plastic red translucent	Solder	**18-042.0052L**	1	1	0.002 kg
			10 mA	Plastic yellow translucent	Solder	**18-042.0054L**	1	1	0.002 kg
			2 mA	Plastic green translucent	Solder	**18-042.0055L**	1	1	0.002 kg

LED colour	Forward voltage typ.	Operating voltage	Operation current	Lens	Terminal	Part No.	Compo-nent layout	Wiring diagram	Weight
Indicator actuator, Front dimension Ø 9 mm									
red	2.0 VDC @ 20 mA	customer-specific	10 mA	Plastic red translucent	Solder	**18-030.0052L**	1	1	0.002 kg
white	3.0 VDC @ 20 mA	customer-specific	10 mA	Plastic yellow translucent	Solder	**18-030.0054L**	1	1	0.002 kg
green	3.2 VDC @ 20 mA	customer-specific	2 mA	Plastic green translucent	Solder	**18-030.0055L**	1	1	0.002 kg
		12 VDC ±10 %	10 mA	Plastic red translucent	Solder	**18-031.0052L**	1	1	0.002 kg
			10 mA	Plastic yellow translucent	Solder	**18-031.0054L**	1	1	0.002 kg
			2 mA	Plastic green translucent	Solder	**18-031.0055L**	1	1	0.002 kg
		24 VDC ±10 %	10 mA	Plastic red translucent	Solder	**18-032.0052L**	1	1	0.002 kg
			10 mA	Plastic yellow translucent	Solder	**18-032.0054L**	1	1	0.002 kg
			2 mA	Plastic green translucent	Solder	**18-032.0055L**	1	1	0.002 kg

The component layouts you will find from page 20

Wiring diagram 1

Lens with LED raised design

Additional Information

- Without built-in series resistor, typical forward voltage 2.2 VDC @ 20 mA
- Luminosity and wave length variations caused by LED manufacturing processes may cause slight differences regarding the illumination

Dimension	Lens	Part No.	Weight
Lens with LED raised design			
7.5 x 7.5 mm	Plastic red translucent	**18-951.2L**	0.001 kg
	Plastic yellow translucent	**18-951.4L**	0.001 kg
	Plastic green translucent	**18-951.5L**	0.001 kg
Lens with LED raised design			
7.5 x 12.5 mm	Plastic red translucent	**18-941.2L**	0.001 kg
	Plastic yellow translucent	**18-941.4L**	0.001 kg
	Plastic green translucent	**18-941.5L**	0.001 kg
Lens with LED raised design			
Ø 7.5 mm	Plastic red translucent	**18-931.2L**	0.001 kg
	Plastic yellow translucent	**18-931.4L**	0.001 kg
	Plastic green translucent	**18-931.5L**	0.001 kg

Front bezel set

Product attribute	Mounting cut-out	Front bezel	Part No.	Weight
Front bezel set, flush design, Front dimension 19 x 19 mm				
for square lens	15.8 x 15.8 mm	Plastic black	**18-920.1**	0.006 kg
Front bezel set, flush design, Front dimension 19 x 19 mm				
for round lens	15.8 x 15.8 mm	Plastic black	**18-920.2**	0.006 kg
Front bezel set, flush design, Front dimension Ø 19 mm				
for round lens	Ø 16 mm	Plastic black	**18-920.3**	0.006 kg

Blind plug

Additional Information

- The dimensions of the mounting cut-outs are shown in the product details

Dimension	Mounting cut-out	Material	Colour	Part No.	Weight
Blind plug					
9 x 9 mm	Ø 8 mm	Plastic	black	**19-948.0**	0.001 kg
Blind plug					
Ø 9 mm	Ø 8 mm	Plastic	black	**19-949.0**	0.001 kg

Rear side

PCB plug-in base

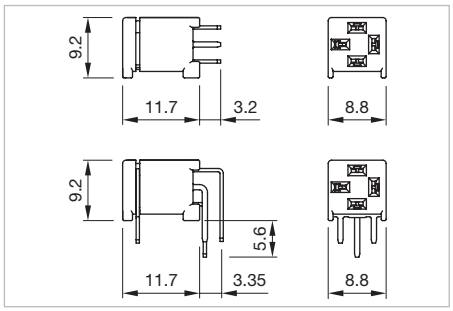

Dimensions [mm]

pins	Terminal	Part No.	Compo-nent layout	Weight
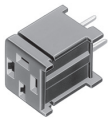 **PCB plug-in base**				
axial	PCB	**18-945**	3	0.001 kg
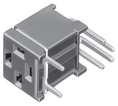 **PCB plug-in base**				
right-angled	PCB	**18-946**	4	0.001 kg

The component layouts you will find from page 20

Mounting

Lens remover

Part No.	Weight
Lens remover	
18-910	0.002 kg

Mounting tool

Additional Information

- For fixing nut long Part No. 19-991

Part No.	Weight
Mounting tool	
19-905	0.011 kg